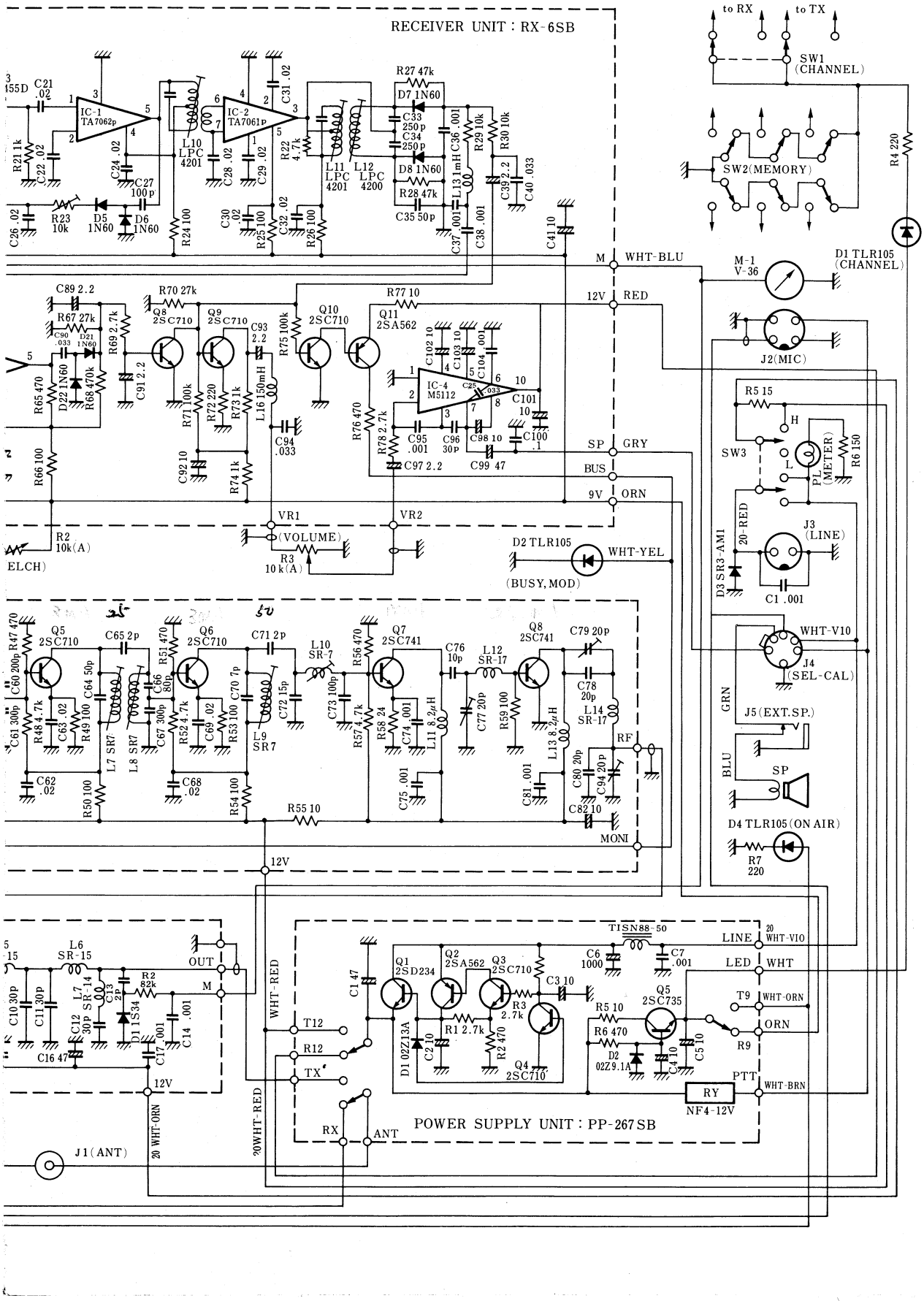
RECEIVER UNIT : RX-6SB
POWER SUPPLY UNIT : PP-267SB
to RX
to TX
SW1 (CHANNEL)
SW2(MEMORY)
R4 220
D1 TLR105 (CHANNEL)
M-1 V-36
J2(MIC)
R5 15
SW3
PL (METER)
R6 150
J3 (LINE)
D3 SR3-AM1
C1 .001
WHT-V10
J4 (SEL-CAL)
J5(EXT.SP.)
SP
D4 TLR105(ON AIR)
R7 220
M WHT-BLU
12V RED
SP GRY
BUS
9V ORN
VR1 (VOLUME)
VR2
R3 10k(A)
R2 10k(A)
D2 TLR105 (BUSY, MOD)
WHT-YEL
IC-1 TA7062p
IC-2 TA7061p
IC-4 M5112
L10 LPC 4201
L11 LPC 4201
L12 LPC 4200
Q8 2SC710
Q9 2SC710
Q10 2SC710
Q11 2SA562
Q5 2SC710
Q6 2SC710
Q7 2SC741
Q8 2SC741
L10 SR-7
L12 SR-17
L14 SR-17
L9 SR7
L7 SR7
L8 SR7
RF
MONI
12V
L6 SR-15
L7 SR-14
OUT
M
J1(ANT)
20 WHT-ORN
WHT-RED
T12
R12
TX
RX
ANT
Q1 2SD234
Q2 2SA562
Q3 2SC710
Q4 2SC710
Q5 2SC735
D1 02Z13A
D2 02Z9.1A
TISN88-50
LINE
LED
T9
R9
PTT
RY
NF4-12V
20 WHT-VIO
WHT
WHT-ORN
ORN
WHT-BRN